Multi-purpose Individual Heating Technology for the Meal, Cold Weather

Peter Lavigne, Chemical Engineer
Equipment & Energy Technology
Combat Feeding
NSRDEC
Natick, MA 01670

2018 DoD Arctic Science & Technology Synchronization Workshop

UNCLASSIFIED - OPSEC PAO U18-281

Natick Soldier RD&E Center

The Soldier's RDEC - Assuring Dominance through Superior Scientific & Engineering Expertise.

Providing the Army with Innovative Science & Technology Solutions to Optimize the Performance of Our Soldiers.

Meal, Cold Weather (MCW)
Special Purpose Operational Ration

Designed to meet the Joint Service requirements of the United States Marine Corps (USMC) and the Army Special Operations Forces (SOF)

Specifically suited for use in extreme cold environments that require a restricted calorie ration with a long shelf life that can be used during initial assault, special operations, and long-range reconnaissance missions.

Multi-purpose Individual Heating Technology

CONCEPT

Meal, Cold Weather (MCW)

Alternative heat sources

Full in-package capability to prepare complete hot meal

DESCRIPTION

- A Multi-purpose Individual Heating Technology (MIT) is being configured to provide a low cost, lightweight, disposable in-package heating capability for the Meal, Cold Weather (MCW)
- The MIT would enable Warfighters to prepare a complete hot meal and beverage in remote locations or where access to or ability to prepare hot water is limited or unavailable

Transition Partners: Equipment & Energy Technology Team, Combat Ration Engineering & Support Team (CREST), Defense Logistics Agency – Troop Support (DLA-TS)

POCs: Peter Lavigne, EETT, 508-233-4939
Barbara Daley, CREST, 508-233-4937

Leveraged Funds/Efforts: OSD Foreign Comparative Testing Office/ DoD Combat Feeding Program (JSN 09-14)

DESIRED CHARACTERISTICS

Capability	Performance Objective
In-package heater	Heat 32 oz water by 140 F <20 min
Acceptability	Greater than 6.0 on hedonic scale
Logistic footprint	< 6 oz and fits in MCW menu bags
Activation Method	Ignites in/sustains 12 mph wind
Shelf Life	Greater than 3 years
Cost	<$2 (required) / <$1 (desired)
Safety	Suitable for use with food / food-safe
Transport/disposal	Unrestricted/unregulated

SCHEDULE

Action	[O]	[T]
Conduct market survey	4QFY15	2QFY16
Validate feasibility/safety	2QFY16	3QFY16
Test candidates/down-select	4QFY15	2QFY17
Complete ATEC safety test	4QFY17	1QFY18
Optimize combustion efficiency	1QFY18	2QFY18
Conduct operational assess.	2QFY18	3QFY18
Transition to Adv. Development	4QFY18	4QFY18

Overarching Characteristics

Deliverables:

- Develop a disposable, lightweight heating mechanism to rapidly heat and reconstitute freeze-dried ration components as a low-cost product insertion for the Meal, Cold Weather (MCW)

Risk/Barriers:

- The MCW is a lightweight, restricted calorie ration that contains a freeze-dried entrée, beverages and ready to eat components. To fully prepare hot entrées and beverages, as much as 32 ounces (one quart) of water may be needed and when water is not available, melting snow/ice is also desirable.
- The heating method must be suitable for inclusion within the meal bag and not pose transport restrictions.
- The heat source and heating assembly or package must be low cost, compact and suitable for field use.
- It is preferable that the heating method facilitate heating two 16 ounce portions of water and the method of ignition or activation be suitable for use in sub-freezing conditions and a 12 mile per hour wind.

Risk Mitigation Plan:

- Alternative heat sources include bio-based heat tabs and chemical heat sources that are safe for use with food and intended to provide a convenient, fully disposable method to heat water remotely.
- Operational ration surveys assessing user needs and preferences will be administered to forces operating in cold regions to identify the optimum characteristics and performance, and address required attributes.
- Collaborative transition of MIT with CREST will ensure that an improved heating method for dehydrated rations can be seamlessly and cost-effectively integrated within the MCW.

Leveraging/Collaborations:

- An OSD Foreign Technology (and Science) Assessment (FTAS) initiative was initiated in FY15 to assess combustible heat sources from Standard Brands (UK) and BCB International (UK). Flameless heaters from Luxfer Magtech, NY and Nex-Xos, FL, and MCW assemblers.
- Coordination/approval of perf specification with CREST/JSORF/DLA-TS for implementation with MCW.

Exit Criteria
Multi-purpose Individual Heating Technology (MIT)

Capability	Technical Performance Measure	Objective	Threshold		Actual	Variance (+/- Actual-Threshold)
In-package water heating method	Heat water for rehydration of ration and hot beverage preparation in cold weather operations	Heat 32 ounces or 2 x16 ounces of water by 140ºF (35ºF to 175ºF) in 20 minutes or less	Heat 32 oz water by 135ºF (35ºF to 170ºF) in 20 minutes or less		Heat 32 ounces of water to near-boil in 20 minutes or less	New capability for MCW
Warfighter Acceptability	Acceptance rate (hedonic scale)	> 7.0 on hedonic scale	> 6.0 on hedonic scale		TBD	TBD
Logistic footprint	Weight/cube	Less than 5 ounces	< 6 ounces	(Fits in MCW menu bags)	3 cubic in.	-
		Less than 3 cu. in.	< 5 cu. in.			
Activation Method	Self-contained activation	Ignites in 12 mph wind or non-freezing activation packet	Ignites in 12 mph wind or non-freezing activation packet		Ignites in 11 mph wind	TBD
Shelf Life	3 years	3 years	3 years		3 years	-
Cost	Heating method cost per MCW	$1 or less per MCW	< $2 per MCW		TBD	TBD

T = Threshold O = Objective

Cold Ambient Heater Performance Testing

Doriot Climatic Chamber Conditioning Room

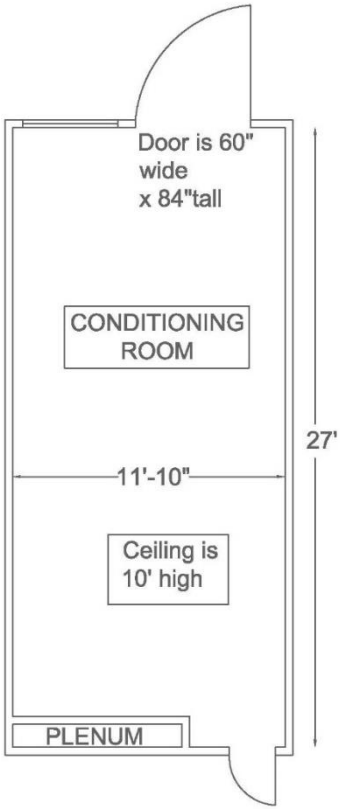

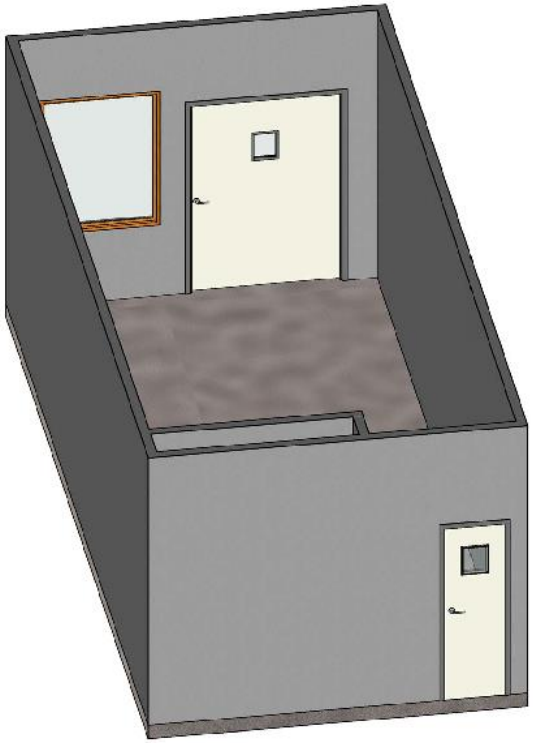

11' 10" by 27' by 10' or 3195 cubic feet

Arctic Tent

Multi-purpose Individual Heating Technology (MIT) Concepts

NEX-XOS

Luxfer Magtech Inc.

FIREDRAGON
GREEN & CLEAN GEL FUEL

ZIP
SINCE 1936

MIT product insertion to the Meal, Cold Weather (MCW)

MCW NSN:
8970-01-467-1753

Flameless Heat Sources

- Luxfer Magtech® / Nex-Xos®
  - Self-contained heating package with zipper-seal 16 ounce pouch
  - Two 40-50g heaters (16 oz portion)
  - Saline / water activated
  - Non-hazardous, air-transportable
  - Suitable for use with food
  - Compact, fully disposable
  - Insulated heating bag with tape or zip closures

Combustible Heat Sources

- ZIP - Standard Brands (UK) / Fire Dragon BCB (UK)
  - 24 grams (~1 ounce)
  - Non-hazardous, air-transportable solid cube/block
  - Suitable for use with food
  - Compact, fully disposable
  - For use with standard issue Canteen Cup (NSN 8465-00-165-6838) and Canteen Cup Stand (NSN 8465-01-250-3632) or fold-out stand, or packaged with alternative disposable foil cup

Target Performance Characteristics

- One cube heats 16 ounces of water to a near-boil
- Heating time: 15 min.
- Safe for use with food
- Long shelf life (>3yrs)
- 2 cubes heat 32 ounces of water for hot beverage and meal preparation

Carbon Monoxide Exposure Limits (OSHA/NIOSH)

* OSHA PEL
The current Occupational Safety and Health Administration (OSHA) permissible exposure limit (PEL) for carbon monoxide is 50 parts per million (ppm) parts of air (55 milligrams per cubic meter (mg/m(3))) as an 8-hour time-weighted average (TWA)
concentration [29 CFR Table Z-1].

* NIOSH REL
The National Institute for Occupational Safety and Health (NIOSH) has established a recommended exposure limit (REL) for carbon monoxide of 35 ppm (40 mg/m(3)) as an 8-hour TWA and 200 ppm (229 mg/m(3)) as a ceiling [NIOSH 1992].

* ACGIH TLV
The American Conference of Governmental Industrial Hygienists (ACGIH) has assigned carbon monoxide a threshold limit value (TLV) of 25 ppm (29 mg/m(3)) as a TWA for a normal 8-hour workday and a 40-hour workweek [ACGIH 1994, p. 15].

* Rationale for Limits
The NIOSH limit is based on the risk of cardiovascular effects [NIOSH 1992]
The ACGIH limit is based on the risk of elevated carboxyhemoglobin levels [ACGIH 1991, p. 229].

Zip® Combustible Heat Source

24 gram solid cube with Canteen Cup / Stand

Fuel:	Zip Cube		Max Water Temp (F):	148.81	Water Starting (ML):	500
Stove:	Foil Foldable		Max Time (M/S):	13:57	Water Ending (ML):	475
Air Temp (F):	-26					
CO Testing						
Test 1:	6 min	11 Samples 1 Baseline		CO Max (PPM):		
Test 2:	17 Mins			CO Avg (PPM):	85.6	After 2nd cube

Fuel:	Zip Fuel		Max Water Temp (F):	172.26	Water Starting (ML):	500
Stove:	Foil Foldable		Max Time (M/S):	12:22	Water Ending (ML):	500
Air Temp:	-22					
CO Testing						
Test 1:	6 min	12 Samples 2 Baselines		CO Max (PPM):	90.0	After 2nd cube
Test 2:	16 Mins			CO Avg (PPM):	60.5	

Zip® Combustible Heat Source

24 gram solid cube with Canteen Cup / Stand

WARNING

1. Use only in a well ventilated space. Combustible heat source consumes oxygen and can generate carbon monoxide and displace oxygen. Do not use in enclosed space. List cup at white insulated strip.
2. Open flame can burn skin and other materials. Use only on the ground, rock or other non-combustible material. Burning heater can char the area under and around the heater.
3. Hot water can burn skin and cause cold-weather injury. Use caution when handling cup after heating, as cup and water will be very hot (scalding).

1. Separate Canteen Cup and Stand
2. Invert Sleeve and firmly seat Canteen Cup in Stand bottom
3. Fill cup with water, snow or ice and place on ground or non-combustible surface
4. Ignite Zip™ Cube heat tab and place Cup/Stand assembly directly over burning cube to heat water. The water will be heated to a near-boil in about 10 minutes.

STEP 1:

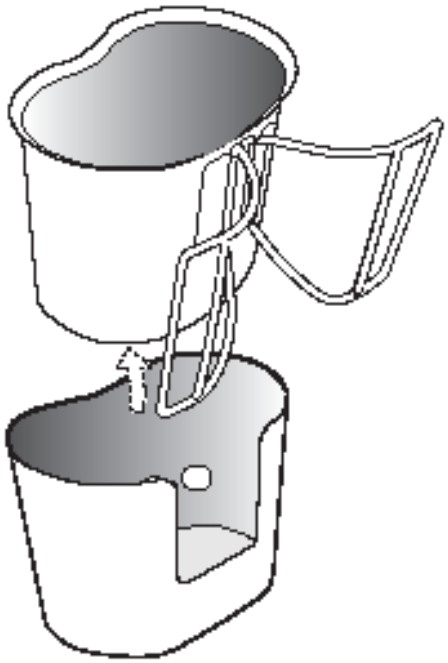

STEPS 2-4:

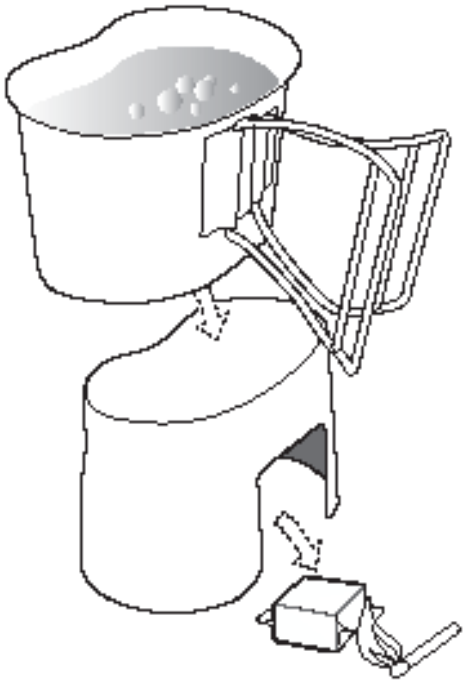

Only one cube is to be burned at a time. A second 16-ounce portion of water may be heated using the second Zip™ Cube.

CAUTION HOT:
Open flame and scalding hot water can burn skin.

Canteen Cup NSN: 8465-00-165-6838
Stand, Canteen Cup NSN: 8465-01-250-3632

Zip® cube Combustion Analysis

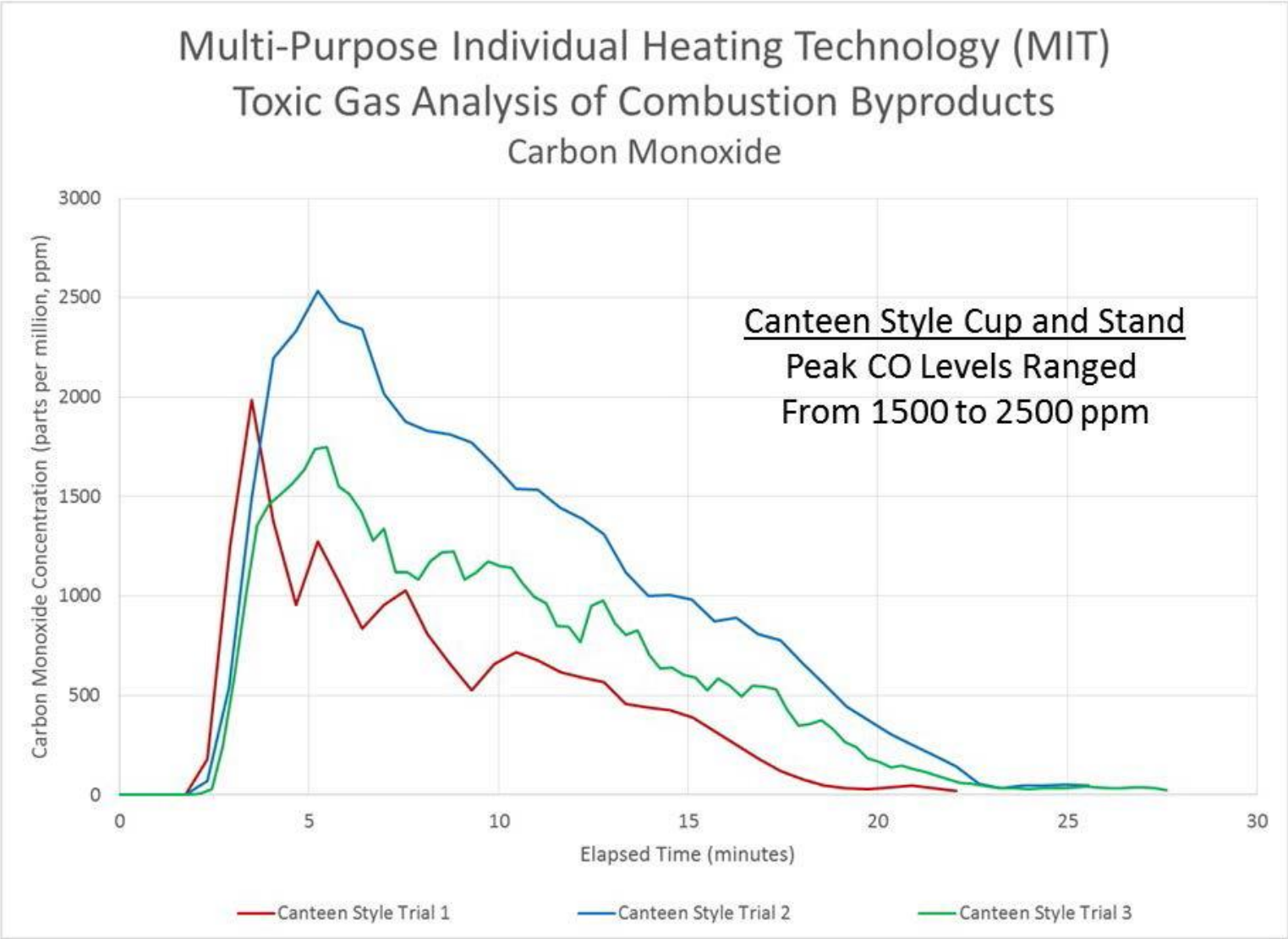

Dragon Fire® Combustible Heat Source

28 gram block with Canteen Cup / Stand

Fuel:	Fire Dragon		Max Water Temp (F):	133.53	Water Starting (ML):	500
Stove:	Canteen Cup	Flat Stand	Max Time (M/S):	12:40	Water Ending (ML):	460
Air Temp:	-25					
CO Testing						
Test 1:	6 min	12 Samples 2 Baselines		CO Max (PPM):	60.0	
Test 2:	16 Mins			CO Avg (PPM):	42.9	

Fuel:	Fire Dragon		Max Water Temp (F):	166.10	Water Starting (ML):	500
Stove:	Canteen Cup	Sleeve	Max Time (M/S):	11:32	Water Ending (ML):	480
Air Temp:	-25					
CO Testing						
Test 1:	6 min	12 Samples 2 Baselines		CO Max (PPM):	60.3	
Test 2:	12 Mins			CO Avg (PPM):	34.7	

Dragon Fire® Combustible Heat Source

28 gram ethanol block with Canteen Cup / Stand

WARNING

1. Use only in a well ventilated space. Combustible heat source consumes oxygen and can generate carbon monoxide and displace oxygen.
   Do not use in enclosed space.

2. Open flame can burn skin and other materials. Use only on the ground, rock or other non-combustible material. Burning heater can char the area under and around the heater.

3. Hot water can burn skin and cause cold-weather injury.
   Use caution when handling cup after heating, as cup and water will be very hot (scalding).

STEP 1:

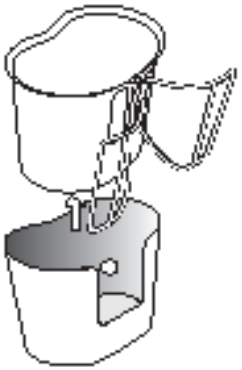

STEP 2-3:

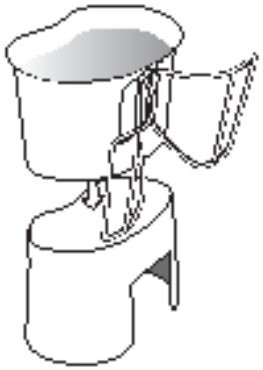

1. Separate Canteen Cup and Stand.
2. Invert Stand and firmly seat Canteen Cup in Stand bottom.
3. Fill cup with water, snow or ice and place on ground or non-combustible surface.
4. Peel off foil lid from Dragon Fire Block. Remove block from plastic tub and discard both lid and tub.
5. Ignite Dragon Fire Block and place Cup/ Stand assembly directly over burning block to heat water. The water will be heated to a near-boil in about 10 minutes.

Only one block is to be burned at a time.
A second 16-ounce portion of water may be heated using the second Dragon Fire Block.

STEP 4:

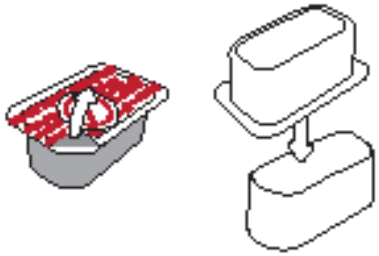

STEP 5:

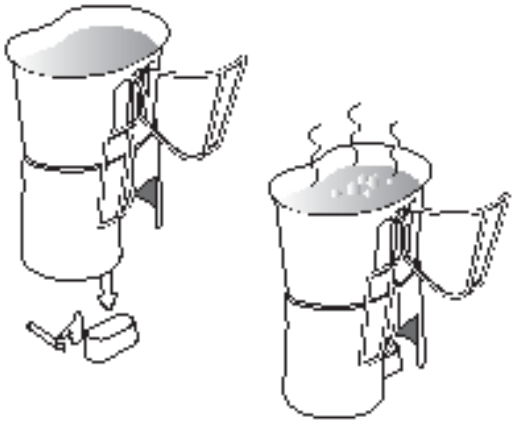

CAUTION HOT:
Open flame and scalding hot water can burn skin.

Canteen Cup NSN: 8465-00-165-6838
Stand, Canteen Cup NSN: 8465-01-250-3632

Dragon Fire® Combustible Heat Source

28 gram block with Canteen Cup / TRAYBAR / Stand

Fuel:	Fire Dragon		Max Water Temp (F):	147.5	Water Starting (ML):	500
Stove:	Canteen Cup	Flat Stand	Max Time (M/S):	15:15	Water Ending (ML):	490
Air Temp:	-22					
CO Testing						
Test 1:	6 min	12 Samples 2 Baselines		CO Max (PPM):	24.9	
Test 2:	16 Mins			CO Avg (PPM):	21.0	

Fuel:	Fire Dragon		Max Water Temp (F):	145.0	Water Starting (ML):	500
Stove:	Canteen Cup	Sleeve	Max Time (M/S):	15:30	Water Ending (ML):	480
Air Temp:	-24					
CO Testing						
Test 1:	6 min	12 Samples 2 Baselines		CO Max (PPM):	30.2	
Test 2:	12 Mins			CO Avg (PPM):	27.7	

Dragon Fire® Combustible Heat Source

28 gram ethanol block with TRAYBAR / Stand / Canteen Cup

WARNING

1. Use only in a well ventilated space. Combustible heat source consumes oxygen and can generate carbon monoxide and displace oxygen.
   Do not use in enclosed space.

2. Open flame can burn skin and other materials. Use only on the ground, rock or other non-combustible material. Burning heater can char the area under and around the heater.

3. Hot water can burn skin and cause cold-weather injury.
   Use caution when handling cup after heating, as cup and water will be very hot (scalding).

1. Separate Canteen Cup and Stand.
2. Invert Stand and place Wire Rack on top as shown in Step 2-3. Place Canteen Cup on top of Rack.
3. Fill cup with water, snow or ice and place on ground or non-combustible surface.
4. Peel off foil lid from Dragon Fire Block. Remove block from plastic tub, and place into aluminum tray. Discard both lid and tub.
5. Ignite Dragon Fire Block and place Cup/ Stand assembly directly over burning block to heat water. The water will be heated to a near-boil in about 10-15 minutes.

CAUTION HOT:
Open flame and scalding hot water can burn skin.

Only one block is to be burned at a time.
A second 16-ounce portion of water may be heated using the second Dragon Fire Block.

Canteen Cup NSN: 8465-00-165-6838
Stand, Canteen Cup NSN: 8465-01-250-3632

STEP 1:

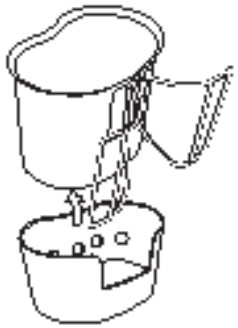

STEP 2-3:

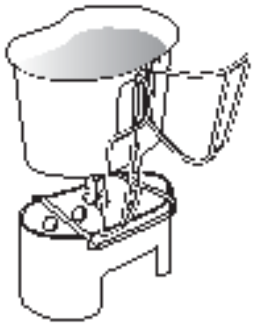

STEP 4:

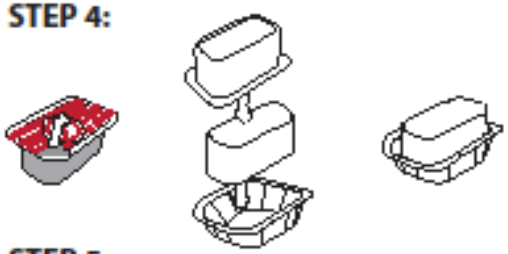

STEP 5:

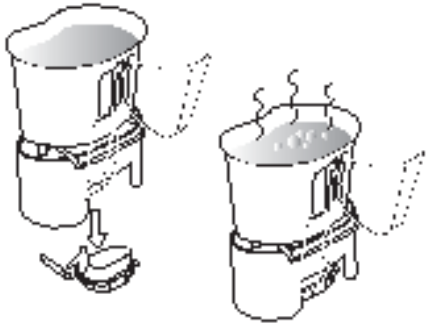

Luxfer Magtech Flameless Heater Performance

Luxfer Magtech® Flameless Heat Source

- Self-contained heating package with zipper-seal 16 ounce pouch
- Two 40-gram heaters (16 ounce portion)
- Saline / water activated
- Non-hazardous, air-transportable
- Suitable for use with food
- Compact, fully disposable
- Insulated heating bag with tape or zip closure

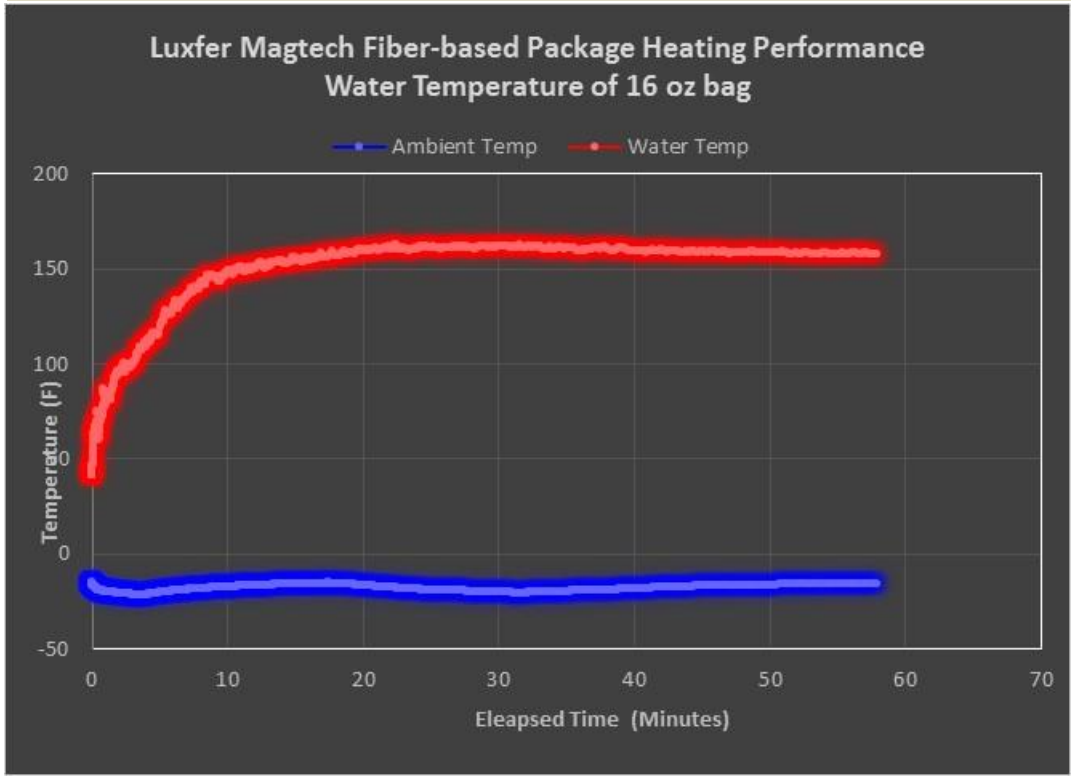

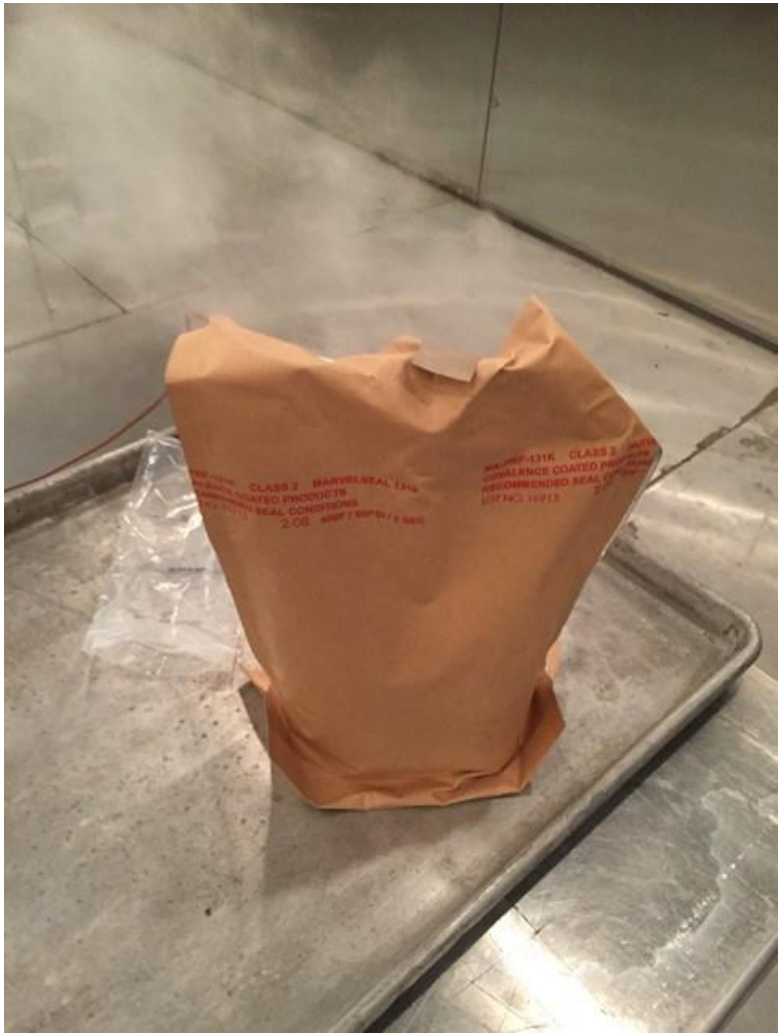

Nex-Xos® Flameless Heater Performance

Nex-Xos® Flameless Heat Source

- Self-contained heating package with zipper-seal 16 ounce pouch
- Two 40-gram heaters (16 ounce portion)
- Water activated
- Non-hazardous, air-transportable
- Suitable for use with food
- Compact, fully disposable
- Gusseted-bottom heating bag with zipper closure
- Utilizes MRE Hot Beverage Bag with additional 16-oz marking

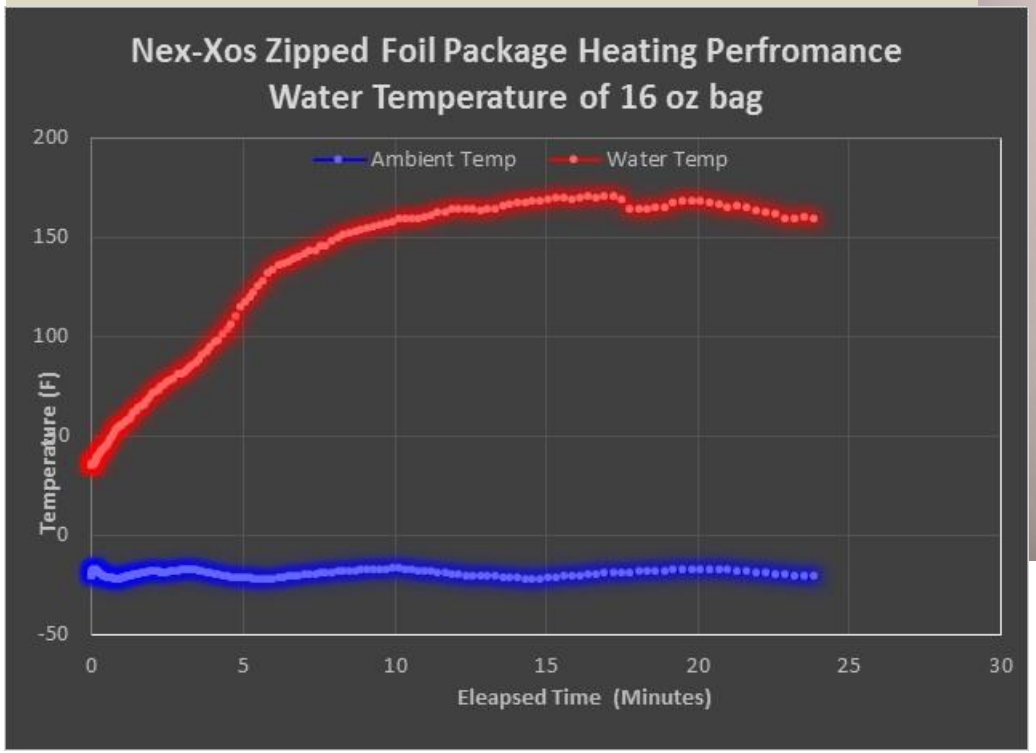

MCW-MIT Pack-out Evaluation

The Wornick Company ® Assembly Trial

- Projected assembly scheduled in May 2018
- Production/assembly contractor for Meal, Cold Weather
- 12 Menus with various meal and accessory components
- Combination of vacuum packed, individually packed and accessory meal components, as well as long-handled spoon
- Heating packet proposed as a product insertion to MCW
- Alternate heater sources and packet profiles to be evaluated
- Priority to maintain 12 meal per case and 48 cases per pallet
- Pallet dimensions 40 x 48 x 43 inches

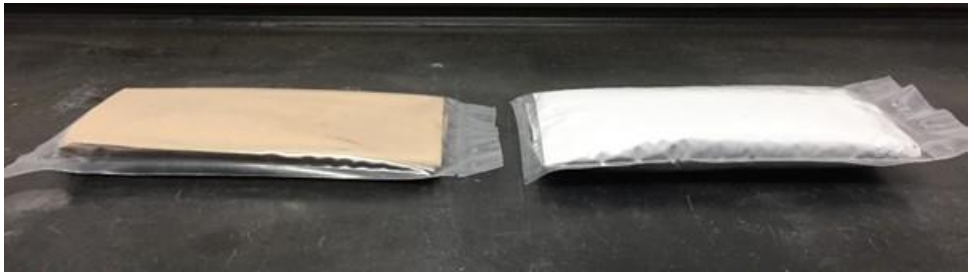

Individual & Group Rations Weights and Cubes

Ration/Item	Srvngs per U/I	U/I per Pallet	Srvngs per Plt	Case Cube	Case l/w/h (in.)	Case Wt(lb)	Cs per U/I	U/I Cube	U/I Wt(lb)	Cs per Pallet	Unit Load l/w/h (in.)	Unit Load Cube	Unit Load Avg. Wt(lb)	Pallet per 20' Cont.	Pallet per 40' Cont.
MRE	12	48	576	1.02	17x9.6x10.8	22	1	1.02	22	48	44.5x51.75x42.2	56.1	1098	16	36
FSR	9	48	432	0.99	17x9.6x10.8	29	1	0.99	29	48	44.5x51.75x42.2	54.7	1434	16	36
MCW/LRP	12	48	576	1.02	17x9.6x10.8	15	1	1.02	15	48	44.5x51.75x42.2	56.1	758	16	36

MCW-MIT Field Survey / Evaluation

Operational Ration Questionnaire

Thank you for participating in this study. All of the information you provide will be kept confidential. Please respond to each question by filling in the selection that best corresponds with your answer. Additional comments may be added at the end of this questionnaire.

Privacy Act Statement

Purpose(s): To evaluate clothing, individual equipment and operational rations under development or consideration by the Army; to determine acceptability of clothing, equipment items and operational rations in consideration of procurement. To locate individual/s who participate in a user assessment or evaluation at the end of the test period, to complete a questionnaire on the test item.

Routine uses of records maintained in the system, including categories of users and the purposes of such uses: In addition to those disclosures generally permitted under 5 U.S.C. 552a(b) of the Privacy Act. These records or information contained therein will not be disclosed outside the DoD. Reports published on findings do not contain any personal information, but lists demographics in the aggregate. The 'Blanket Routine Uses' set forth at the beginning of the Army's compilation of systems of records notices apply to this system.

When answering each question, fill in each circle completely, like this: ●

What is your gender? Fill in one circle. MALE (M) FEMALE (F)

Rank: E-____O-____ or WO-____

Age? _____ years

What is your unit? _____

MOS/Rating:_____

Duty Position:_____

How long have you been in the military? _____ years

What was your last real-world deployment (not FTX)? Fill in ONE.

- (A) Have not deployed yet
- (B) Iraq
- (C) Afghanistan
- (D) Other (place?_____)

How long was this deployment? _____ months

What is your experience level with…

Cold Temperatures (below 32 degrees F)?	Cold Weather Military Training/Operations?
(A) None	(A) None
(B) Little	(B) Little
(C) Some	(C) Some
(D) Substantial	(D) Substantial

1

- Field user survey/reports completed by NSRDEC's Operational Forces Interface Group (OFIG) with 305 respondents during cold region operational exercises with Soldiers stationed at Fort Wainwright, AK
- On-going Doriot cold chambers validation testing to support optimization of concepts
- Following down-select, heater concepts will be formally evaluated in cold weather operational environment to confirm user acceptability
- Performance specification will be prepared to support transition